PHASE 3

Study the converter topology. Prepare slides for the below bullets:

- Show the basic schematic and topology of your converter.
- List the features/characteristics of the converter topology.
- What are its pros and cons. Comment on what types of application this particular converter can be used for.

LTSpice Schematic – LTC3862-2_DC1891.asc

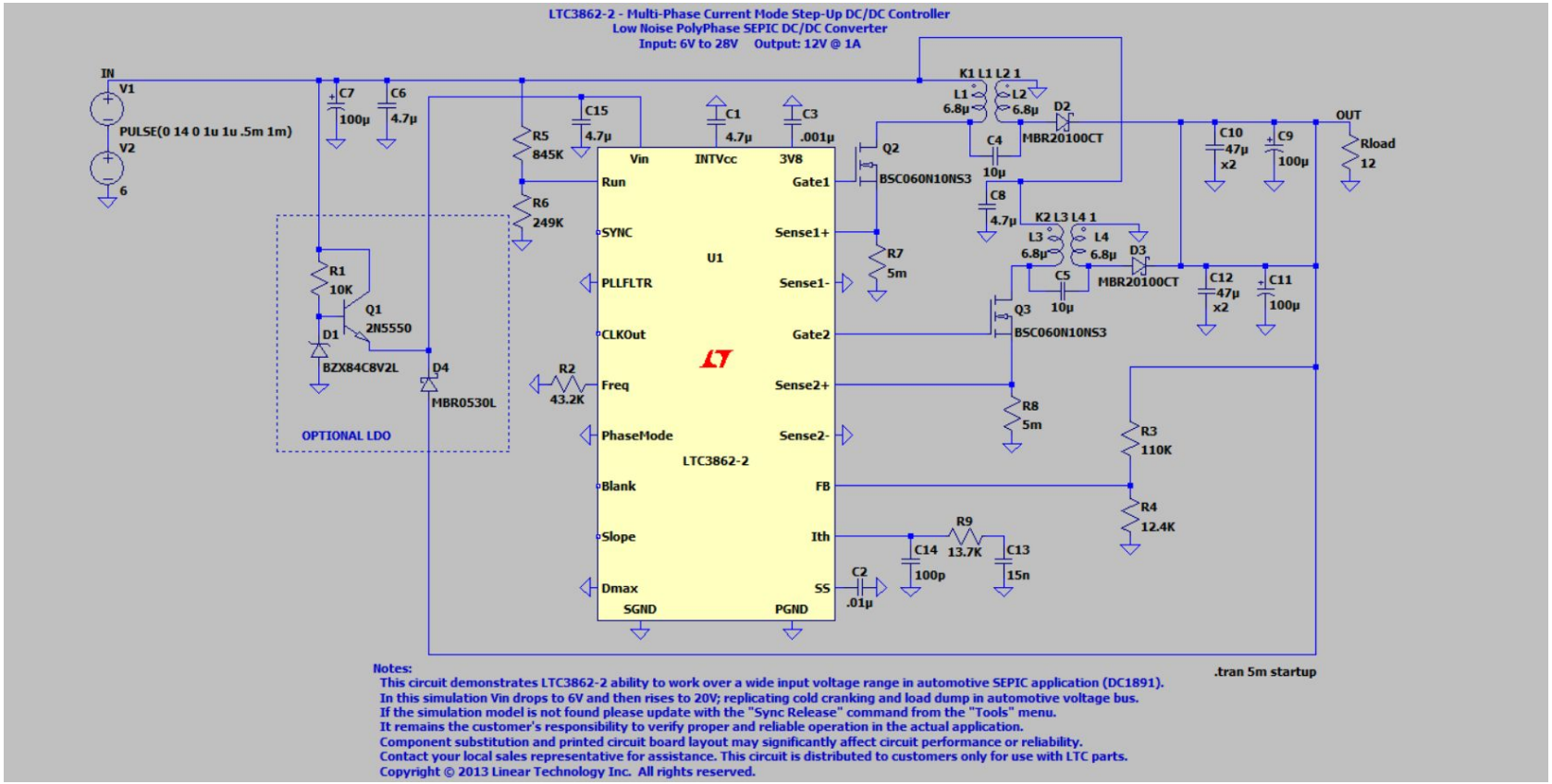

Simplified Circuit Topology

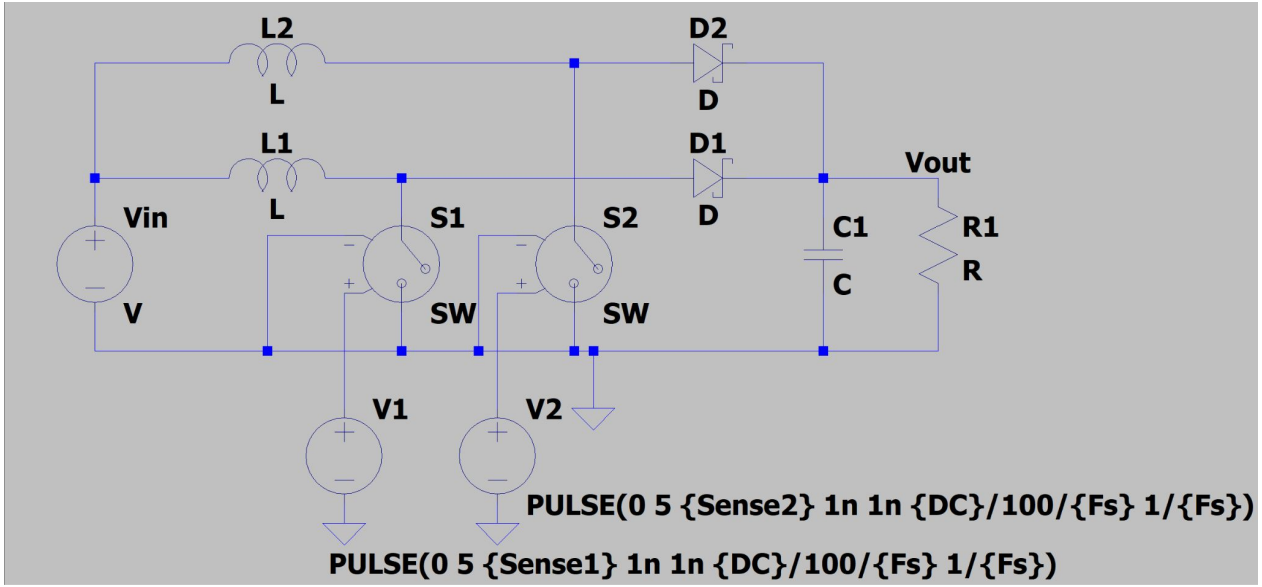

Feedback Path

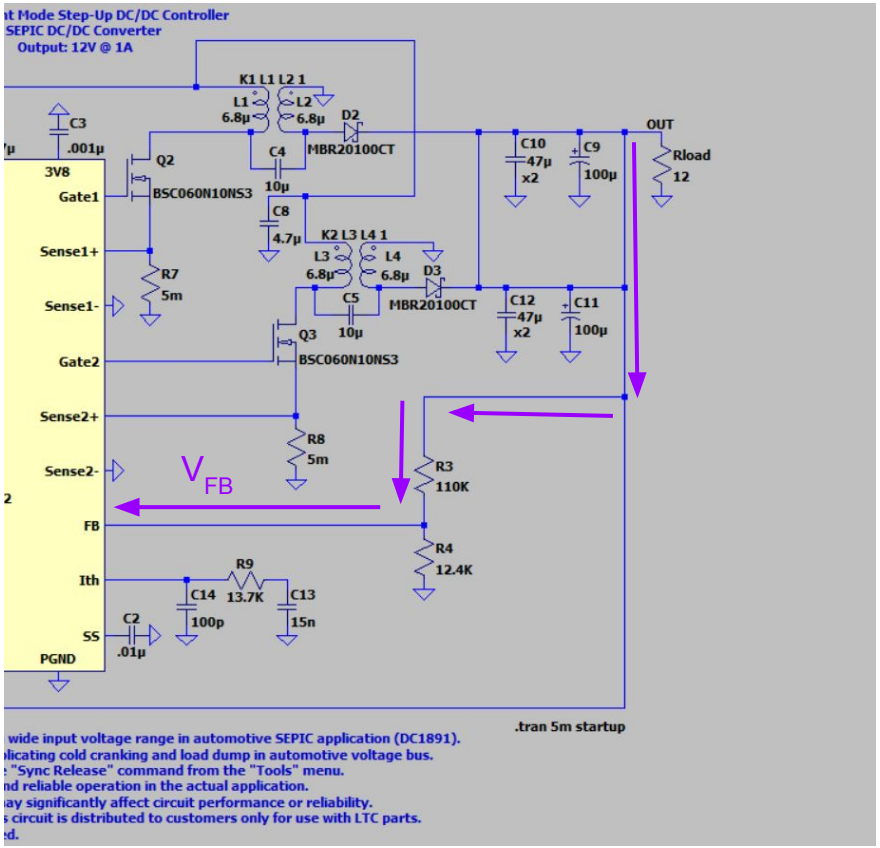

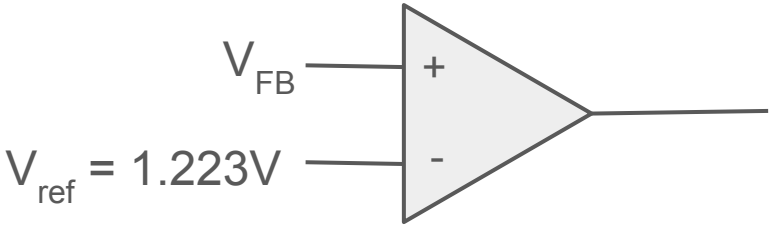

Feedback loop works as a voltage divider to an op-amp:

- Increasing R4 increases V_{out}
- Decreasing R4 decreases V_{out}
- No current (in µA) through feedback path

LTSpice Schematic – LTC3862-2_DC1891.asc → V(out):

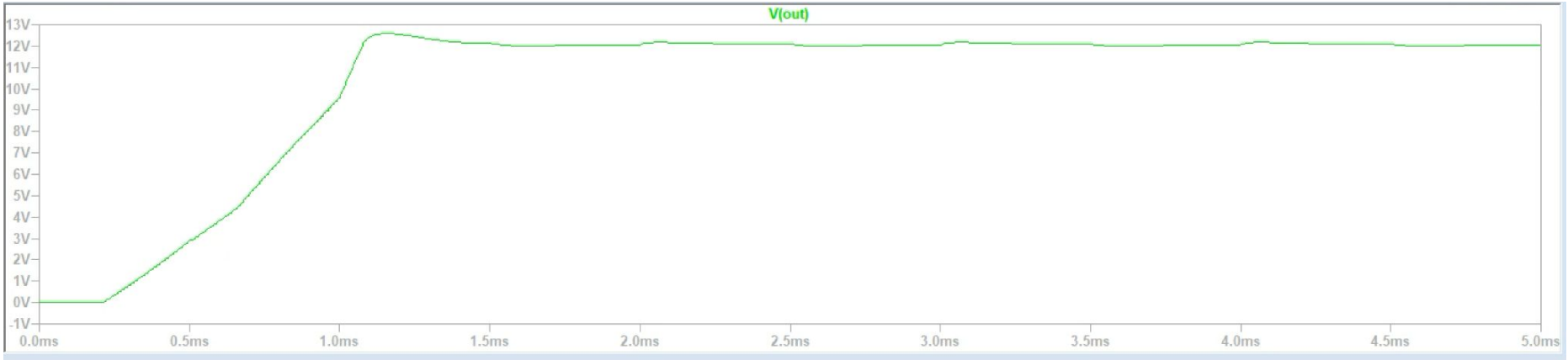

Features/Characteristics

- Buck-Boost behavior without inverting.
- Two-phase (interleaved) constant-frequency, peak current-mode control.
  - High efficiency
- Programmable limits/knobs commonly used in design validation:
  - Adjustable Max duty-cycle limit (Dmax)
  - Soft-start (SS) pin for controlled startup by ramping allowed peak current.
  - Programmable switching frequency via a resistor (Freq)
- Peak Current-Mode Control for fast transient response

Pros & Cons

PROS:

- Step-up and step-down capability without polarity inversion.
- 2-phase (interleaving) reduces ripple current per phase, which leads to typically lower input/output ripple and potentially smaller filtering for the same power.
- External MOSFETs let you scale current/power and optimize efficiency.

CONS:

- More parts, more things to get wrong vs a normal buck, boost, or buck-boost.
- Increased design complexity and costs.
- Higher components leads to more heat, which results in more concern regarding thermal design.